CE TEST REPORT

UHAT19181182

Prepared For :	Shenzhen jinchuangda Electronic Materials Co., Ltd Building D, No. 2, Baotian Road, Xinsheng community, Longgang street, Longgang District, Shenzhen
Product Name:	Disposable protective mask
Model No.:	PH001
Prepared By :	Shenzhen UHAT Technology Co., Ltd. 5F Building B of No.61 Economic Cooperation Complex Building in 44 District of Anle Community, Xin' an Street, Baoan District, Shenzhen City, Guangdong Prov, China
Test Date:	Mar.16,2020 ~ Mar.20,2020
Date of Report :	Mar.20,2020
Report No.:	UHAT19181182
Report verification code:	R15180435

This report shall not be reproduced except in full, without the written approval of Shenzhen UHAT Technology Co., Ltd.
Tel: 86-755-32986968 Fax: 86-755-32986988 http://www.uhatt.com E-mail:uhat315@126.com

TEST REPORT

EN 149:2001 + A1:2009

Respiratory protective devices — Filtering half masks to protect against particles — Requirements, testing, marking

Report Number.....:	UHAT19181182	
Tested by (name + signature) .....:	Tom zhang	Tom zhang
Approved by (name + signature) .:	Tonny zhong	Tonny zhong
Date of issue.....:	Mar.20,2020	
Applicant's name .....:	Shenzhen jinchuangda Electronic Materials Co., Ltd	
Address.....:	Building D, No. 2, Baotian Road, Xinsheng community, Longgang street, Longgang District, Shenzhen	
Test specification:		
Standard .....:	EN 149:2001 + A1:2009	
Test procedure.....:	General report	
Non-standard test method.....:	N/A	
Test Report Form No. .....:	EN 149:2001 + A1:2009	
Test Item description..... :	Disposable protective mask	
Trade Mark..... :	PIN HUI	
Manufacturer.....:	Shenzhen jinchuangda Electronic Materials Co., Ltd Building D, No. 2, Baotian Road, Xinsheng community, Longgang street, Longgang District, Shenzhen	
Model/Type reference.....:	PH001	
Ratings .....:	FFP2	

This report shall not be reproduced except in full, without the written approval of Shenzhen UHAT Technology Co., Ltd.

Copy of marking plate:

Disposable protective mask
Model: PH001
FFP2
EN 149:2001 +A1:2009
2020/03

Summary of test results:

The test samples was found to comply with the requipments of EN 149:2001 +A1:2009

Test case verdicts

Test case does not apply to the test object :	N/A
Test item does meet the requirement :	P(ass)
Test item does not meet the requirement :	F(ail)

General remarks

This report is not valid as a CB Test Report unless signed by an approved CB Testing Laboratory and appended to a CB Test Certificate issued by an NCB in accordance with IECEE 02.

The test results presented in this report relate only to the object tested.
This report shall not be reproduced, except in full, without the written approval of the Issuing testing laboratory.

"(see Enclosure #)" refers to additional information appended to the report.
"(see appended table)" refers to a table appended to the report.

Throughout this report a comma is used as the decimal separator.

General informations:

Model List:	
Test Model	PH001
Other Model	/
All tests are carried out on PH001 1. All test samples and test samples are of the same material , except different model names and colors.	

This report shall not be reproduced except in full, without the written approval of Shenzhen UHAT Technology Co., Ltd.

EN 149:2001 + A1:2009

Respiratory protective devices — Filtering half masks to protect against particles — Requirements, testing, marking

EN 149:2001+A1:2009			
Clause	Requirement - Test	Result - Remark	Verdict
3	**Terms and definitions**		—
	For the purposes of this European Standard the definitions given in EN 132 and the nomenclature given in EN 134 apply ！together with the following:		P
3.1	**re-useable particle filtering half mask** particle filtering half mask intended to be used for more than a single shift″		N/A
4	**Description**		—
	A particle filtering half mask covers the nose and mouth and the chin and may have inhalation and/or exhalation valve(s). The half mask consists entirely or substantially of filter material or comprises a facepiece in which the main filter(s) form an inseparable part of the device.		P
	It is intended to provide adequate sealing on the face of the wearer against the ambient atmosphere, when the skin is dry or moist and when the head is moved.		P
	Air enters the particle filtering half mask and passes directly to the nose and mouth area of the facepiece or, via an inhalation valve(s) if fitted. The exhaled air flows through the filter material and/or an exhalation valve (if fitted) directly to the ambient atmosphere.		P
	These devices are designed to protect against both solid and liquid aerosols.		P
5	**Classification**		—
	Particle filtering half masks are classified according to their filtering efficiency and their maximum total inward leakage. There are three classes of devices: FFP1, FFP2 and FFP3.	FFP2 NR	P
	The protection provided by an FFP2 - or FFP3 - device includes that provided by the device of lower class or classes. In addition, particle filtering half masks are classified as single shift use only or as re-usable (more than one shift).		P
6	**Designation**		—
	Particle filtering half masks meeting the requirements of this European Standard shall be designated in the following manner:		P

EN 149:2001+A1:2009			
Clause	Requirement - Test	Result - Remark	Verdict
	Particle filtering half mask EN 149, year of		P
	publication, classification, option (where "D" is an option for a non re-useable particle filtering half mask and mandatory for re-useable particle filtering half mask).		
	EXAMPLE Particle filtering half mask EN 149:2001 FFP1 NR D		N/A
7	**Requirements**		—
7.1	**General**		P
	In all tests all test samples shall meet the requirements.		P
7.2	**Nominal values and tolerances**		P
	Unless otherwise specified, the values stated in this European Standard are expressed as nominal values. Except for temperature limits, values which are not stated as maxima or minima shall be subject to a tolerance of ± 5 %. Unless otherwise specified, the ambient temperature for testing shall be (16 - 32) ° C, and the temperature limits shall be subject to an accuracy of ± 1 ° C.		P
7.3	**Visual inspection**		P
	The visual inspection shall also include the marking and the information supplied by the manufacturer.		P
7.4	**Packaging**		P
	Particle filtering half masks shall be offered for sale packaged in such a way that they are protected against mechanical damage and contamination before use. Testing shall be done in accordance with 8.2		P
7.5	**Material**		P
	Materials used shall be suitable to withstand handling and wear over the period for which the particle filtering half mask is designed to be used. After undergoing the conditioning described in 8.3.1 none of the particle filtering half masks shall have suffered mechanical failure of the facepiece or straps.		P
	Three particle filtering half masks shall be tested.		P
	When conditioned in accordance with 8.3.1 and 8.3.2 the particle filtering half mask shall not collapse.		P

This report shall not be reproduced except in full, without the written approval of Shenzhen UHAT Technology Co., Ltd.

EN 149:2001+A1:2009			
Clause	Requirement - Test	Result - Remark	Verdict
	Any material from the filter media released by the air flow through the filter shall not constitute a hazard or nuisance for the wearer. Testing shall be done in accordance with 8.2.		P
7.6	**Cleaning and disinfecting**		N/A
	If the particle filtering half mask is designed to be re-usable, the materials used shall withstand the cleaning and disinfecting agents and procedures to be specified by the manufacturer.		N/A
	Testing shall be done in accordance with 8.4 and 8.5.		N/A
	With reference to 7.9.2, after cleaning and disinfecting the re-usable particle filtering half mask shall satisfy the penetration requirement of the relevant class. Testing shall be done in accordance with 8.11.		N/A
7.7	**Practical performance**		P
	The particle filtering half mask shall undergo practical performance tests under realistic conditions.		P
	These general tests serve the purpose of checking the equipment for imperfections that cannot be determined by the tests described elsewhere in this standard.		P
	Where practical performance tests show the apparatus has imperfections related to wearer's acceptance, the test house shall provide full details of those parts of the practical performance tests which revealed these imperfections. Testing shall be done in accordance with 8.4.		P
7.8	**Finish of parts**		P
	Parts of the device likely to come into contact with the wearer shall have no sharp edges or burrs. Testing shall be done in accordance with 8.2.		P
7.9	**Leakage**		P
7.9.1	**Total inward leakage**		P
	The laboratory tests shall indicate that the particle filtering half mask can be used by the wearer to protect with high probability against the potential hazard to be expected.		P

This report shall not be reproduced except in full, without the written approval of Shenzhen UHAT Technology Co., Ltd.

EN 149:2001+A1:2009			
Clause	Requirement - Test	Result - Remark	Verdict
	The total inward leakage consists of three components: face seal leakage, exhalation valve leakage (if exhalation valve fitted) and filter penetration.		P
	For particle filtering half masks fitted in accordance with the manufacturer's information, at least 46 out of the 50 individual exercise results (i.e. 10 subjects x 5 exercises) for total inward leakage shall be not greater than 25 % for FFP1 11 % for FFP2 5 % for FFP3	total inward leakage: 3,10%	P
	and, in addition, at least 8 out of the 10 individual wearer arithmetic means for the total inward leakage shall be not greater than 22 % for FFP1 8 % for FFP2 2 % for FFP3. Testing shall be done in accordance with 8.5.	total inward leakage: 3,00%	P
7.9.2	**Penetration of filter material**		P
	The penetration of the filter of the particle filtering half mask shall meet the requirements of Table 1.	FFP2	P
	Table 1 — Penetration of filter material Classification: [A1] Maximum penetration of test aerosol [A1] Sodium chloride test 95 l/min % max. Paraffin oil test 95 l/min % max. FFP1: 20 / 20 FFP2: 6 / 6 FFP3: 1 / 1		P
	A total of 9 samples of particle filtering half masks shall be tested for each aerosol.		P
	Testing in accordance with 8.11 using the Penetration test according to EN 13274-7, shall be performed on: - 3 samples as received; - 3 samples after the simulated wearing treatment described in 8.3.1.		P
	Testing in accordance with 8.11 using the Exposure test with a specified mass of test aerosol of 120 mg, and for particle filtering devices claimed to be re-usable additionally the Storage test, according to EN 13274-7, shall be performed:		P

EN 149:2001+A1:2009			
Clause	Requirement - Test	Result - Remark	Verdict
	for non-re-usable devices on: - 3 samples after the test for mechanical strength in accordance with 8.3.3 followed by temperature conditioning in accordance with 8.3.2.		P
	for re-usable devices on: - 3 samples after the test for mechanical strength in accordance with 8.3.3 followed by temperature conditioning in accordance with 8.3.2. and followed by one cleaning and disinfecting cycle according to the manufacturer's instruction.		P
7.10	**Compatibility with skin**		P
	Materials that may come into contact with the wearer's skin shall not be known to be likely to cause irritation or any other adverse effect to health.		P
	Testing shall be done in accordance with 8.4 and 8.5.		P
7.11	**Flammability**		P
	The material used shall not present a danger for the wearer and shall not be of highly flammable nature.		P
	When tested, the particle filtering half mask shall not burn or not to continue to burn for more than 5 s after removal from the flame. The particle filtering half mask does not have to be usable after the test. Testing shall be done in accordance with 8.6.	continue to burn for 2s	P
7.12	**Carbon dioxide content of the inhalation air**		P
	The carbon dioxide content of the inhalation air (dead space) shall not exceed an average of 1,0 % (by volume). Testing shall be done in accordance with 8.7.	0,10%	P
7.13	**Head harness**		P
	The head harness shall be designed so that the particle filtering half mask can be donned and removed easily.		P
	The head harness shall be adjustable or self-adjusting and shall be sufficiently robust to hold the particle filtering half mask firmly in position and be capable of maintaining total inward leakage requirements for the device. Testing shall be done in accordance with 8.4 and 8.5.		P
7.14	**Field of vision**		P

EN 149:2001+A1:2009			
Clause	Requirement - Test	Result - Remark	Verdict
	The field of vision is acceptable if determined so in practical performance tests. Testing shall be done in accordance with 8.4.		P
	Breathing resistance		P
	The breathing resistances apply to valved and valveless particle filtering half masks and shall meet the requirements of Table 2. Testing shall be done in accordance with 8.9.		P
	Table 2 — Breathing resistance Classification: Maximum permitted resistance (mbar) — inhalation: 30 l/min, 95 l/min; exhalation: 160 l/min FFP1: 0,6 / 2,1 / 3,0 FFP2: 0,7 / 2,4 / 3,0 FFP3: 1,0 / 3,0 / 3,0		P
7.17	**Clogging**		P
7.17.1	**General**		P
	For single shift use devices, the clogging test is an optional test. For re-usable devices the test is mandatory.	For single shift use devices	P
	Devices designed to be resistant to clogging, shown by a slow increase of breathing resistance when loaded with dust, shall be subjected to the treatment described in 8.10.		N/A
	The specified breathing resistances shall not be exceeded before the required dust load of 833 mg h/m$_3$ is reached.		N/A
7.17.2	**Breathing resistance**		N/A
7.17.2.1	**Valved particle filtering half masks**		N/A
	After clogging the inhalation resistances shall not exceed FFP1: 4 mbar FFP2: 5 mbar FFP3: 7 mbar at 95 l/min continuous flow;.		N/A
	The exhalation resistance shall not exceed 3 mbar at 160 l/min continuous flow. Testing shall be done in accordance with 8.9.		N/A
7.17.2.2	**Valveless particle filtering half masks**		N/A

This report shall not be reproduced except in full, without the written approval of Shenzhen UHAT Technology Co., Ltd.

EN 149:2001+A1:2009			
Clause	Requirement - Test	Result - Remark	Verdict
	After clogging the inhalation and exhalation resistances shall not exceed FFP1: 3 mbar FFP2: 4 mbar FFP3: 5 mbar at 95 l/min continuous flow. Testing shall be done in accordance with 8.9		N/A
7.17.3	**Penetration of filter material**		N/A
	All types (valved and valveless) of particle filtering half masks claimed to meet the clogging requirement shall also meet the requirements given in 7.9.2, for the Penetration test according to EN 13274-7, after the clogging treatment. Testing shall be done in accordance with 8.11 using EN 13274-7		N/A
7.18	**Demountable parts**		P
	All demountable parts (if fitted) shall be readily connected and secured, where possible by hand. Testing shall be done in accordance with 8.2.		P
8	**Testing**		—
8.1	**General**		P
	If no special measuring devices and methods are specified, commonly used devices and methods shall be used. NOTE For a summary of testing, see Table 4. Before performing tests involving human subjects account should be taken of any national regulations concerning the medical history, examination or supervision of the test subjects.		P
8.2	**Visual inspection** The visual inspection is carried out where appropriate by the test house prior to laboratory or practical performance tests.		P
8.3	**Conditioning**		P
8.3.1	**Simulated wearing treatment**		P
	Conditioning by simulated wearing treatment shall be carried out by the following process.		P

This report shall not be reproduced except in full, without the written approval of Shenzhen UHAT Technology Co., Ltd.

EN 149:2001+A1:2009			
Clause	Requirement - Test	Result - Remark	Verdict
	A breathing machine is adjusted to 25 cycles/min and 2,0 l/stroke. The particle filtering half mask is mounted on a Sheffield dummy head. For testing, a saturator is incorporated in the exhalation line between the breathing machine and the dummy head, the saturator being set at a temperature in excess of 37 ° C to allow for the cooling of the air before it reaches the mouth of the dummy head. The air shall be saturated at (37 ± 2) ° C at the mouth of the dummy head. In order to prevent excess water spilling out of the dummy' s mouth and contaminating the particle filtering half mask the head shall be inclined so that the water runs away from the mouth and is collected in a trap.		P
	The breathing machine is brought into operation, the saturator switched on and the apparatus allowed to stabilize. The particle filtering half mask under test shall then be mounted on the dummy head. During the test time at approximately 20 min intervals the particle filtering half mask shall be completely removed from the dummy head and refitted such that during the test period it is fitted ten times to the dummy head		P
8.3.2	**Temperature conditioning**		P
	Expose the particle filtering half masks to the following thermal cycle:		P
	a) for 24 h to a dry atmosphere of (70 ± 3) ° C;		P
	b) for 24 h to a temperature of (-30 ± 3) ° C; and allow to return to room temperature for at least 4 h between exposures and prior to subsequent testing.		P
	The conditioning shall be carried out in a manner which ensures that no thermal shock occurs.		P
8.3.3	**Mechanical strength**		P
	Conditioning shall be done in accordance with EN 143.		P
	Flow conditioning		P
	A total of 3 valved particle filtering half masks shall be tested, one as received and two temperature conditioned in accordance with 8.3.2.		P
8.4	**Practical performance**		P

EN 149:2001+A1:2009			
Clause	Requirement - Test	Result - Remark	Verdict
8.4.1	**General**		P
	A total of 2 particle filtering half masks shall be tested: both as received. All tests shall be carried out by two test subjects at ambient temperature and the test temperature and humidity shall be recorded. Prior to the test there shall be an examination to assure that the particle filtering half mask is in good working condition and that it can be used without hazard. Examination shall be done in accordance with 8.2.		P
	For the test, persons shall be selected who are familiar with using such or similar equipment. During the tests the particle filtering half mask shall be subjectively assessed by the wearer and after the test, comments on the following shall be recorded: a) head harness comfort; b) security of fastenings; c) field of vision; d) any other comments reported by the wearer on request.		P
8.4.2	**Walking test**		P
	The subjects wearing normal working clothes and wearing the particle filtering half mask shall walk at a regular rate of 6 km/h on a level course. The test shall be continuous, without removal of the particle filtering half mask, for a period of 10 min.		P
8.4.3	**Work simulation test**		P
	The particle filtering half mask shall be tested under conditions which can be expected during normal use. During this test the following activities shall be carried out in simulation of the practical use of the particle filtering half mask. The test shall be completed within a total working time of 20 min.		P
	The sequence of activities is at the discretion of the test house. The individual activities shall be arranged so that sufficient time is left for the comments prescribed.		P
	a) walking on the level with headroom of (1,3 ± 0,2) m for 5 min;		P
	b) crawling on the level with headroom of (0,70 ± 0,05) m for 5 min;		P

EN 149:2001+A1:2009			
Clause	Requirement - Test	Result - Remark	Verdict
	c) filling a small basket (see Figure 1, approximate volume = 8 l) with chippings or other suitable material from a hopper which stands 1,5 m high and has an opening at the bottom to allow the contents to be shovelled out and a further opening at the top where the basket full of chippings is returned.		P
	The subject shall stoop or kneel as he wishes and fill the basket with chippings. He shall then lift the basket and empty the contents back into the hopper. This shall be done 20 times in 10 min.		P
8.5	**Leakage**		P
8.5.1	**General test procedure**		P
8.5.1.1	**Total inward leakage**		P
	A total of 10 test specimens shall be tested: 5 as received and 5 after temperature conditioning in accordance with 8.3.2.		P
	The total inward leakage shall be tested using sodium chloride aerosol.		P
	Prior to the test there shall be an examination to ensure that the particle filtering half mask is in good working condition and that it can be used without hazard. Examination shall be done in accordance with 8.2.		P
	For the test, persons shall be selected who are familiar with using such or similar equipment.		P
	A panel of ten clean-shaven persons (without beards or sideburns) shall be selected covering the spectrum of facial characteristics of typical users (excluding significant abnormalities). It is to be expected that exceptionally some persons cannot be satisfactorily fitted with a particle filtering half mask. Such exceptional subjects shall not be used for testing particle filtering half masks. In the test report the faces of the ten test subjects shall be described (for information only) by the four facial dimensions (in mm) illustrated in Figure 2.		P
.1.2	**Test equipment**		P

EN 149:2001+A1:2009			
Clause	Requirement - Test	Result - Remark	Verdict
	The test atmosphere shall preferably enter the top of the enclosure through a flow distributor, and be directed downwards over the head of the test subject at a minimum flow rate of 0,12 m/s. The concentration of the test agent inside the effective working volume shall be checked to be homogeneous. The flow rate should be measured close to the subject's head.		P
	A level treadmill is required capable of working at 6 km/h.		P
8.5.1.3	**Test procedure**		P
	Ask the test subjects to read the manufacturer's fitting information and if more than one size of particle filtering half mask is manufactured, ask the test subject to select the size deemed by him to be the most appropriate. If necessary the test supervisor shall show the test subjects how to fit the particle filtering half mask correctly in accordance with the fitting information.		P
	Inform the test subjects that if they wish to adjust the particle filtering half mask during the test they may do so. However if this is done, repeat the relevant section of the test, having allowed the system to resettle.		P
	The test subjects shall have no indication of the results as the test proceeds.		P
	After fitting the particle filtering half mask, ask each test subject 'Does the mask fit?'. If the answer is 'Yes', continue the test. If the answer is 'No', take the test subject off the panel, report the fact and replace with another test subject.		P
	The test sequence shall be as follows:		P
	a) Ensure the test atmosphere is OFF.		P
	b) Place the test subject in the enclosure. Connect up the facepiece sampling probe. Have the test subject walk at 6 km/h for 2 min. Measure the test agent concentration inside the particle filtering half mask to establish the background level.		P
	c) Obtain a stable reading.		P
	d) Turn the test atmosphere ON.		P
	e) The subject shall continue to walk for a further 2 min or until the test atmosphere has stabilized.		P

This report shall not be reproduced except in full, without the written approval of Shenzhen UHAT Technology Co., Ltd.

EN 149:2001+A1:2009			
Clause	Requirement - Test	Result - Remark	Verdict
	f) Whilst still walking the subject shall perform the following exercises: 1) walking for 2 min without head movement or talking; 2) turning head from side to side (approx. 15 times), as if inspecting the walls of a tunnel for 2 min; 3) moving the head up and down (approx. 15 times), as if inspecting the roof and floor for 2 min; 4) reciting the alphabet or an agreed text out loud as if communicating with a colleague for 2 min; 5) walking for 2 min without head movement or talking.		P
	g) Record 1) enclosure concentration; 2) the leakage over each exercise period.		P
	h) Turn off the test atmosphere and when the test agent has cleared from the enclosure remove the subject.		P
	After each test, replace the particle filtering half mask by a new sample.		P
8.5.2	**Method**		P
8.5.2.1	**Principle**		P
	The subject wearing the particle filtering half mask under test walks on a treadmill over which is an enclosure.		P
	Through this enclosure flows a constant concentration of NaCl aerosol. The air inside the particle filtering half mask is sampled and analysed during the inhalation phase of the respiratory cycle to determine the NaCl content. The sample is extracted by punching a hole in the particle filtering half mask and inserting a probe through which the sample is drawn. The pressure variation inside the particle filtering half mask is used to actuate a change-over valve so that inhaled air only is sampled. A second probe is inserted for this purpose.		P
8.5.2.2	**Test equipment (see Figure 3)**		P
8.5.2.2.1	**Aerosol generator**		P

This report shall not be reproduced except in full, without the written approval of Shenzhen UHAT Technology Co., Ltd.

EN 149:2001+A1:2009			
Clause	Requirement - Test	Result - Remark	Verdict
	The NaCl aerosol shall be generated from a 2 % solution of reagent grade NaCl in distilled water. An atomizer equivalent to the type described should be used (see Figure 4). This requires an air flow rate of 100 l/min at a pressure of 7 bar. The atomizer and its housing shall be fitted into a duct through which a constant flow of air is maintained. It may be necessary to heat or dehumidify the air in order to obtain complete drying of the aerosol particles.		P
8.5.2.2.2	**Test agent**		P
	The mean NaCl concentration within the enclosure shall be (8 ± 4) mg/m$_3$ and the variation throughout the effective working volume shall be not more than 10 %. The particle size distribution shall be 0,02 ⌠m to 2 ⌠m equivalent aerodynamic diameter with a mass median diameter of 0,6 ⌠m.		P
8.5.2.2.3	**Flame photometer**		P
	A flame photometer shall be used to measure the concentration of NaCl inside the particle filtering half mask. Essential performance characteristics for a suitable instrument are:		P
	a) It should be a flame photometer specifically designed for the direct analysis of NaCl aerosol;		P
	b) It should be capable of measuring concentrations of NaCl aerosol between 15 mg/m$_3$ and 5 ng/m$_3$;.		P
	c) The total aerosol sample required by the photometer should not be greater than 15 l/min;		P
	d) The response time of the photometer, excluding the sampling system, should not be greater than 500 ms;		P
	e) It is necessary to reduce the response to other elements, particularly carbon, the concentration of which will vary during the breathing cycle. This will be achieved by ensuring that the band pass width of the interference filter is no greater than 3 nm and that all necessary side-band filters are included		P
8.5.2.2.4	**Sample selector**		P

EN 149:2001+A1:2009			
Clause	Requirement - Test	Result - Remark	Verdict
	A system is required which will switch the sample to the photometer only during the inhalation phase of the respiratory cycle.		P
	During the exhalation phase clean air shall be fed to the photometer. The essential elements of such a system are:.		P
	a) An electrically operated valve with a response time of the order of 100 ms. The valve should have the minimum possible dead space compatible with straight-through, unrestricted flow when open;		P
	b) A pressure sensor which is capable of detecting a minimum pressure change of approx. 0,05 mbar and which can be connected to a probe inserted in the cavity of the particle filtering half mask. The sensor shall have an adjustable threshold and be capable of differential signalling when the threshold is crossed in either direction. The sensor shall work reliably when subjected to the accelerations produced by the head movements of the subject;		P
	c) An interfacing system to actuate the valve in response to a signal from the pressure sensor;		P
	d) timing device to record the proportion of the total respiratory cycle during which sampling took place.		P
8.5.2.2.5	**Sampling probe**		P
	The probe shall be fitted securely in an airtight manner to the particle filtering half mask as near as possible to the centre line of the particle filtering half mask. A multiple hole sampling probe is strongly recommended		P
	Measures shall be taken to prevent the influence of condensation in the sampling probe on the measurement (by supplying dry air). Figure 5 shows a design that has been found suitable. The probe is adjusted so that it just touches the wearer's lips.		P
	Care shall be taken to ensure that the probe does not disturb the normal fit or shape of the mask.		P
8.5.2.2.6	**Sample pump**		P

EN 149:2001+A1:2009			
Clause	Requirement - Test	Result - Remark	Verdict
	If no pump is incorporated into the photometer an adjustable flow pump is used to withdraw an air sample from the particle filtering half mask under test. This pump is so adjusted as to withdraw a constant flow of 1 l/min from the sample probe. Dependent on the type of photometer it may be necessary to dilute the sample with clean air.		P
8.5.2.2.7	**Sampling of enclosure concentration** The enclosure aerosol concentration is monitored during the tests using a separate sampling system, to avoid contamination of the particle filtering half mask sampling lines. It is preferable to use a separate flame photometer for this purpose. If a second photometer is not available, sampling of the enclosure concentration using a separate sampling system and the same photometer may be made. However, time will then be required to allow the photometer to return to a clean background.		P
8.5.2.2.8	**Pressure detection probe**		P
	A second probe is fitted near to the sample probe and is connected to the pressure sensor.		P
8.5.2.3	**Expression of results**		P
	The leakage P shall be calculated from measurements made over the last 100 s of each of the exercise periods to avoid carry over of results from one exercise to the other. $$P(\%) = \frac{C_2}{C_1} \times \left(\frac{t_{IN} + t_{EX}}{t_{IN}} \right) \times 100$$ where C_1 is the challenge concentration C_2 is the measured mean concentration in the breathing zone of the test subject t_{IN} is the total duration of inhalation t_{EX} is the total duration of exhalation Measurement of C_2 is preferably made using an integrating recorder.		P
8.6	**Flammability**		P
	A total of four particle filtering half masks shall be tested: two in the state as received and two after temperature conditioning in accordance with 8.3.2.		P

EN 149:2001+A1:2009			
Clause	Requirement - Test	Result - Remark	Verdict
	The single burner test is carried out according to the following procedure.		P
	The facepiece is put on a metallic dummy head which is motorized such that it describes a horizontal circle with a linear speed, measured at the tip of the nose, of (60 ± 5) mm/s.		P
	The head is arranged to pass over a propane burner the position of which can be adjusted. By means of a suitable gauge, the distance between the top of the burner, and the lowest part of the facepiece (when positioned directly over the burner) shall be set to (20 ± 2) mm.		P
	A burner described in ISO 6941 has been found suitable.		P
	With the head turned away from the area adjacent to the burner, the propane gas is turned on, the pressure adjusted to between 0,2 bar and 0,3 bar and the gas ignited. By means of a needle valve and fine adjustments to the supply pressure, the flame heigt shall be set to (40 ± 4) mm. This is measured with a suitable gauge. The temperature of the flame measured at a height of (20 ± 2) mm above the burner tip by means of a 1,5 mm diameter mineral insulated thermocouple probe, shall be (800 ± 50) ° C.		P
	Failure to meet the temperature requirement indicates that a fault such as a partially blocked burner exists. This shall be rectified before testing.		P
	The head is set in motion and the effect of passing the facepiece once through the flame shall be noted.		P
	The test shall be repeated to enable an assessment to be made of all materials on the exterior of the device. Any one component shall be passed through the flame once only.		P
8.7	**Carbon dioxide content of the inhalation air**		P
	A total of 3 particle filtering half masks shall be tested: all 3 as received.		P
	The apparatus consists essentially of a breathing machine with solenoid valves controlled by the breathing machine, a connector, a CO_2 flowmeter and a CO_2 analyser.		P

EN 149:2001+A1:2009			
Clause	Requirement - Test	Result - Remark	Verdict
	The apparatus subjects the particle filtering half mask to a respiration cycle by the breathing machine.		P
	For this test the particle filtering half mask shall be fitted securely in a leak-tight manner but without deformation to a Sheffield dummy head (see Figure 6).		P
	Air shall be supplied to it from a breathing machine adjusted to 25 cycles/min and 2,0 l/stroke and the exhaled air shall have a carbon dioxide content of 5 % by volume.		P
	A typical test arrangement is shown in Figure 7. If the design of the test equipment causes a CO_2 build-up a CO_2 absorber shall be used in the inhalation branch between solenoid valve and breathing machine.		P
	The CO_2 is fed into the breathing machine via a control valve, a flowmeter, a compensating bag and two non-return valves.		P
	Immediately before the solenoid valve a small quantity of exhaled air is preferably continuously withdrawn through a sampling line and then fed into the exhaled air via a CO_2 analyser.		P
	To measure the CO_2 content of the inhaled air, 5 % of the stroke volume of the inhalation phase of the breathing machine is drawn off at the marked place by an auxiliary lung and fed to a CO_2 analyser. The total dead space of the gas path (excluding the breathing machine) of the test installation should not exceed 2000 ml.		P
	Measure the carbon dioxide content of the inhaled air and record continuously.		P
	Test conditions are ambient atmospheric conditions.		P
	The ambient carbon dioxide level is measured 1 m in front of and level with the tips of the nose of the dummy head. The ambient level is measured once a stabilized level for carbon dioxide in the inhalation air has been attained.		P
	Alternatively, the ambient level of carbon dioxide may be measured at the sampling tube with the carbon dioxide supply turned off.		P
	Results are deemed acceptable only if the measured value of the ambient level of carbon dioxide is less than 0,1 %.		P

EN 149:2001+A1:2009			
Clause	Requirement - Test	Result - Remark	Verdict
	The laboratory ambient carbon dioxide level shall be subtracted from the measured value. The air flow from the front shall be 0,5 m/s. For test arrangement see Figure 8.		P
	The test shall be performed until a constant carbon dioxide content in the inhalation air is achieved.		P
8.8	**Strength of attachment of exhalation valve housing**		P
	A total of three particle filtering half masks shall be tested: one as received, one temperature conditioned in accordance with 8.3.2 and one after the test described for mechanical strength in EN 143.		P
	Mount the particle filtering half mask securely to a fixture as shown in Figure 9. Apply an axial tensile force of 10 N to the valve (housing) for 10 s, and note the results.		P
8.9	**Breathing Resistance**		P
8.9.1	**Test samples and fixture**		P
8.9.1.1	**Valveless particle filtering half masks™**		P
	A total of 9 ~ valveless particle filtering™ half masks shall be tested: 3 as received, 3 after temperature conditioning in accordance with 8.3.2 and 3 after the test for simulated wearing in accordance with 8.3.1		P
8.9.1.2	**Valved particle filtering half masks™**		P
	A total of 12 valved particle filtering half masks shall be tested: 3 as received, 3 after temperature conditioning in accordance with 8.3.2, 3 after the test for simulated wearing in accordance with 8.3.1and 3 after the flow conditioning in accordance with 8.3.4.		P
	The particle filtering half mask shall be fitted securely in a leaktight manner but without deformation on the Sheffield dummy head.		P
	The flow rate at which the resistance is measured shall be corrected to 23$_o$C and 1 bar absolute.		P
8.9.2	**Exhalation resistance**		P

EN 149:2001+A1:2009			
Clause	Requirement - Test	Result - Remark	Verdict
	Seal the particle filtering half mask on the Sheffield dummy head. Measure the exhalation resistance at the opening for mouth of the dummy head using the adapter shown in Figure 6 and a breathing machine adjusted to 25 cycles/min and 2.0 l/stroke or a continous flow 160 l/min. Use a suitable pressure transducer.		P
	Measure the exhalation resistance with the dummy head successively placed in 5 defined positions:		P
	facing directly ahead		P
	facing vertically upwards		P
	facing vertically downwards		P
	lying on the left side		P
	lying on the right side		P
8.9.3	**Inhalation resistance**		P
	Test the inhalation resistance at 30 l/min and 95 l/min continuous flow.		P
8.10	**Clogging**		P
8.10.1	**Principle**		P
	The test aerosol shall be dolomite. A total of 3 particle filtering half masks shall be tested: 1 as received and 2 after temperature conditioning in accordance with 8.3.2.		P
	The test consists of subjecting the particle filtering half mask to a sinusoidal breathing simulation, whilst the sample is surrounded by a known concentration of dolomite dust in air. Following the exposure, the breathing resistance and the filter penetration of the sample particle filtering half mask are measured.		P
8.10.2	**Test equipment**		P
	A scheme of a typical apparatus is given in Figure 10. The working area of the test chamber has a suggested square section of 650 mm · 650 mm.		P

This report shall not be reproduced except in full, without the written approval of Shenzhen UHAT Technology Co., Ltd.
Tel: 86-755-32986968 Fax: 86-755-32986988 http://www.uhatt.com E-mail:uhat315@126.com

EN 149:2001+A1:2009			
Clause	Requirement - Test	Result - Remark	Verdict
	The breathing machine has a displacement of 2,0 l/stroke. The exhaled air shall pass a humidifier in the exhaled air circuit, such that the exhaled air temperature, measured at the position of the sample particle filtering half mask is (37 ± 2) ° C and 95 % R.H. minimum.		P
8.10.3	**Test conditions**		P
	Dust: DRB 4/15 dolomite The size distribution of dolomite dust is given in Table 3.		P
	Table 3 — Size distribution of dolomite dust		P

Coulter counter		Sedimentation analysis	
Size (equivalent spherical diameter) µm	% Number particles oversize	Size (Stokes diameter) µm	% weight oversize
0,7	100	1	99,5
1	80	2	97,5
2	30	3	95
3	17	5	85
5	7	8	70
		10	50
9	2	12	26
		14	10
12	1	18	1

	The particle size distribution of the airborne dust at the working area of the dust chamber is given in Figure 11.		P
	This characteristic is an essential parameter, which shall be verified especially if the geometry of the test chamber is somewhat different from the model described as follows:		P
	Continuous flow through the dust chamber: 60 m_3/h, linear velocity 4 cm/s;		P
	Sinusoidal flow through the particle filtering half mask is delivered by a breathing machine adjusted to 15 cycles/min and 2,0 l/stroke; the exhaled air shall be saturated in humidity;		P
	Concentration of the dust: (400 ± 100) mg/m_3;		P
	Temperature of the air: (23 ± 2) ° C;		P

This report shall not be reproduced except in full, without the written approval of Shenzhen UHAT Technology Co., Ltd.
Tel: 86-755-32986968 Fax: 86-755-32986988 http://www.uhatt.com E-mail:uhat315@126.com

EN 149:2001+A1:2009			
Clause	Requirement - Test	Result - Remark	Verdict
	Relative humidity of the air: (45 ± 15) %;		P
	Testing time: Until the product of measured dust concentration and exposure time is 833 mg h/m_3 or until:		P
	1) for valved particle filtering half masks the peak inhalation resistance (corresponding to a continuous flow of 95 l/min) has reached 4 mbar for class FFP1 or 5 mbar for class FFP2 or 7 mbar for class FFP3, or until the peak exhalation resistance has reached a 1,8 mbar (corresponding to 3 mbar at a continuous flow of 160 l/min);		P
	2) for valveless particle filtering half masks the peak inhalation or the peak exhalation resistance has reached 3 mbar for class FFP1 or 4 mbar for class FFP2 or 5 mbar for class FFP3. NOTE 833 mg h/m_3 corresponds to inhaling a total volume of air laden with 1,5 g of dust. This is represented for example by a dust concentration of 400 mg/m_3 and an exposure time of 125 min. Because of the dust losses on exhalation, the cumulative weight of dust collected on the particle filtering half mask will probably be less than 1,5 g. For this reason there is no purpose in weighing the sample particle filtering half mask.		P
8.10.4	**Test procedure**		P
	Convey dust from the distributor to the dust chamber where it is dispersed into the air stream of 60 m_3/h.		P
	Fit the sample particle filtering half mask in a leaktight manner to a dummy head or a suitable filter holder located in the dust chamber. Connect the breathing machine and humidifier to the sample and operate for the specified testing time.		P
	The concentration of dust in the test chamber may be measured by drawing air at 2 l/min through a sampling probe equipped with a pre- weighed, high efficiency filter (open face, diameter 37 mm) located near the test sample, as shown in Figure 10.		P
	Calculate the dust concentration from the weight of dust collected, the flow rate through the filter and the time of collection.		P
	Other suitable means may be used.		P
8.10.5	**Assessment of clogging**		P

EN 149:2001+A1:2009			
Clause	Requirement - Test	Result - Remark	Verdict
	Following the exposure, measure the breathing resistance of the particle filtering half mask using clean air. Then measure the filter penetration in accordance with 8.11.		P
	Penetration of filter material		P
	The device shall be mounted in a leaktight manner on a suitable adaptor and subjected to the test(s), ensuring that components of the device that could affect filter penetration values such as valves and harness attachment points are exposed to the challenge aerosol.		P
	Testing of penetration, exposure and storage shall be done in accordance with EN 13274-7.″		P
9	**Marking**		—
9.1	**Packaging**		P
	The following information shall be clearly and durably marked on the smallest commercially available packaging or legible through it if the packaging is transparent.		P
9.1.1	The name, trademark or other means of identification of the manufacturer or supplier.		P
9.1.2	Type-identifying marking.		P
9.1.3	Classification		P
	The appropriate class (FFP1, FFP2 or FFP3) followed by a single space and then: "NR" if the particle filtering half mask is limited to single shift use only. Example: FFP3 NR, or "R" if the particle filtering half mask is re-usable. Example: FFP2 R D.″		P
9.1.4	The number and year of publication of this European Standard.		P
9.1.5	At least the year of end of shelf life. The end of shelf life may be informed by a pictogram as shown in Figure 12a, where yyyy/mm indicates the year and month.		P
9.1.6	The sentence 'see information supplied by the manufacturer', at least in the official language(s) of the country of destination, or by using the pictogram as shown in Figure 12b.		P
9.1.7	The manufacturer's recommended conditions of storage (at least the temperature and humidity) or equivalent pictogram, as shown in Figures 12c and 12d.		P

This report shall not be reproduced except in full, without the written approval of Shenzhen UHAT Technology Co., Ltd.

EN 149:2001+A1:2009			
Clause	Requirement - Test	Result - Remark	Verdict
9.1.8	The packaging of those particle filtering half masks passing the dolomite clogging test shall be additionally marked with the letter "D". ! This letter shall follow the classification marking preceded by a single space. Example FFP2 R D″		P
9.2	**Particle filtering half mask**		P
	Particle filtering half masks complying with this European Standard shall be clearly and durably marked with the following:		P
9.2.1	The name, trademark or other means of identification of the manufacturer or supplier.		P
9.2.2	Type-identifying marking.		P
9.2.3	The number and year of publication of this European Standard.		P
9.2.4	Classification The appropriate class (FFP1, FFP2 or FFP3) followed by a single space and then: "NR" if the particle filtering half mask is limited to single shift use only. Example: FFP3 NR, or "R" if the particle filtering half mask is re-usable. Example: FFP2 R D.″		P
9.2.5	If appropriate the letter D (dolomite) in accordance with clogging performance. This letter shall follow the classification marking preceded by a single space (see 9.2.4). Examples FFP3 NR D, FFP2 R D″		P
9.2.6	Sub-assemblies and components with considerable bearing on safety shall be marked so that they can be identified.		P
10	**Information to be supplied by the manufacturer**		—
10.1	Information supplied by the manufacturer shall accompany every smallest commercial available package.		P
10.2	Information supplied by the manufacturer shall be at least in the official language(s) of the country of destination.		P

This report shall not be reproduced except in full, without the written approval of Shenzhen UHAT Technology Co., Ltd.

EN 149:2001+A1:2009			
Clause	Requirement - Test	Result - Remark	Verdict
10.3	The information supplied by the manufacturer shall contain all information necessary for trained and qualified persons on application/limitations; the meaning of any colour coding; checks prior to use; donning, fitting; use; maintenance (e.g. cleaning, disinfecting), if applicable; storage; the meaning of any symbols/pictograms used of the equipment.		P
10.4	The information shall be clear and comprehensible. If helpful, illustrations, part numbers, marking shall be added.		P
10.5	Warning shall be given against problems likely to be encountered, for example: fit of particle filtering half mask (check prior to use); it is unlikely that the requirements for leakage will be achieved if facial hair passes under the face seal; air quality (contaminants, oxygen deficiency); use of equipment in explosive atmosphere.		P
10.6	The information shall provide recommendations as to when the particle filtering half mask shall be discarded.		P
10.7	For devices marked "NR", a warning shall be given that the particle filtering half mask shall not be used for more than one shift.		P

This report shall not be reproduced except in full, without the written approval of Shenzhen UHAT Technology Co., Ltd.

	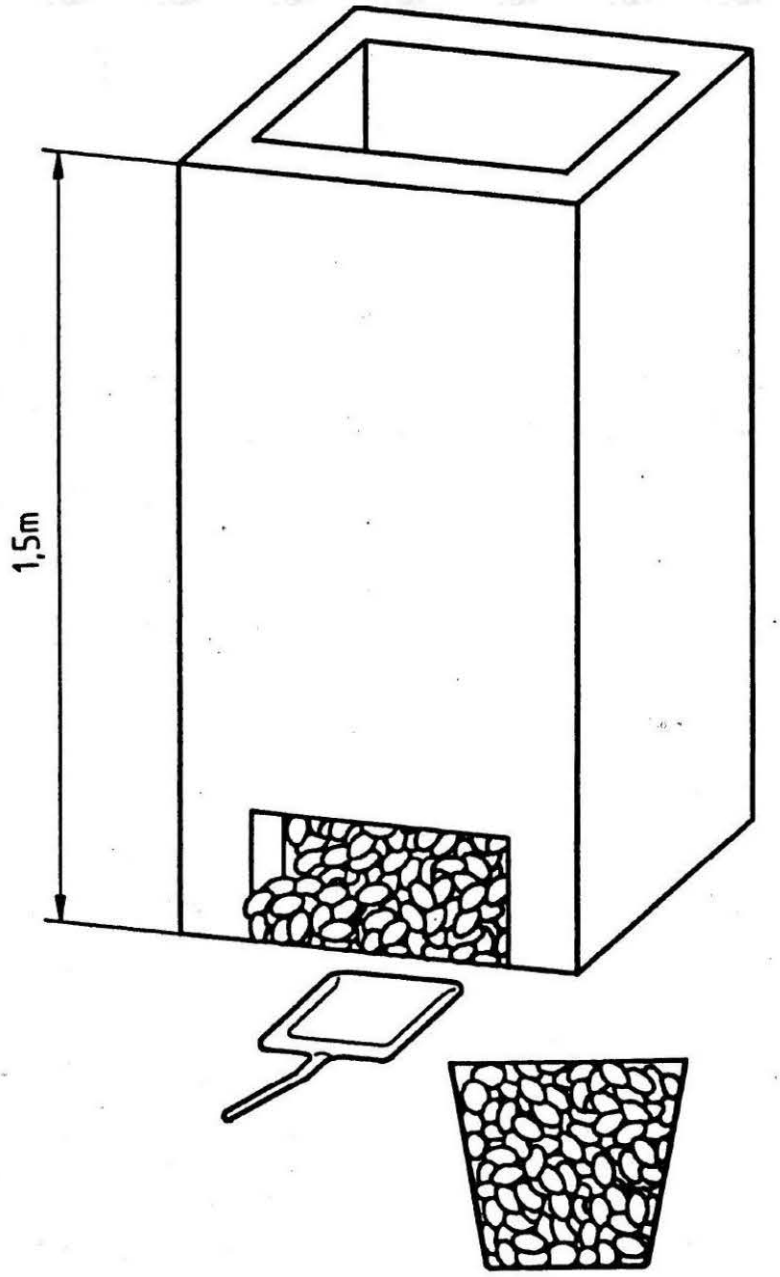 Figure 1 — Basket and hopper, chippings	P

P

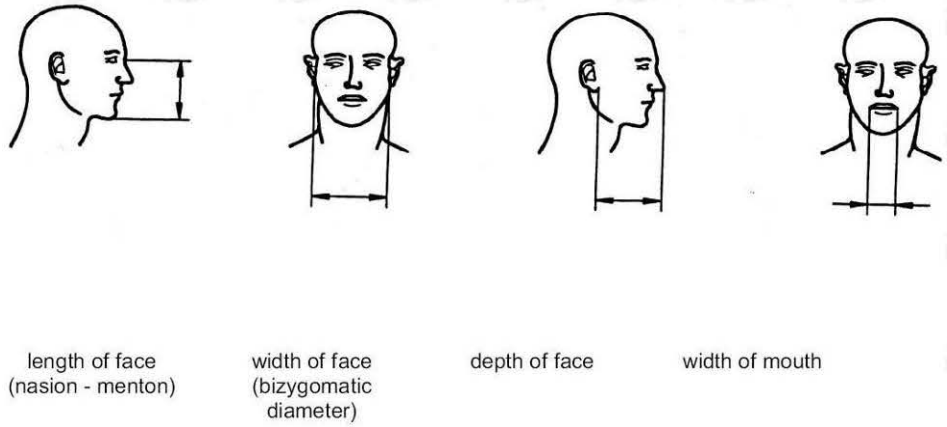

Figure 2 — Facial dimensions

P

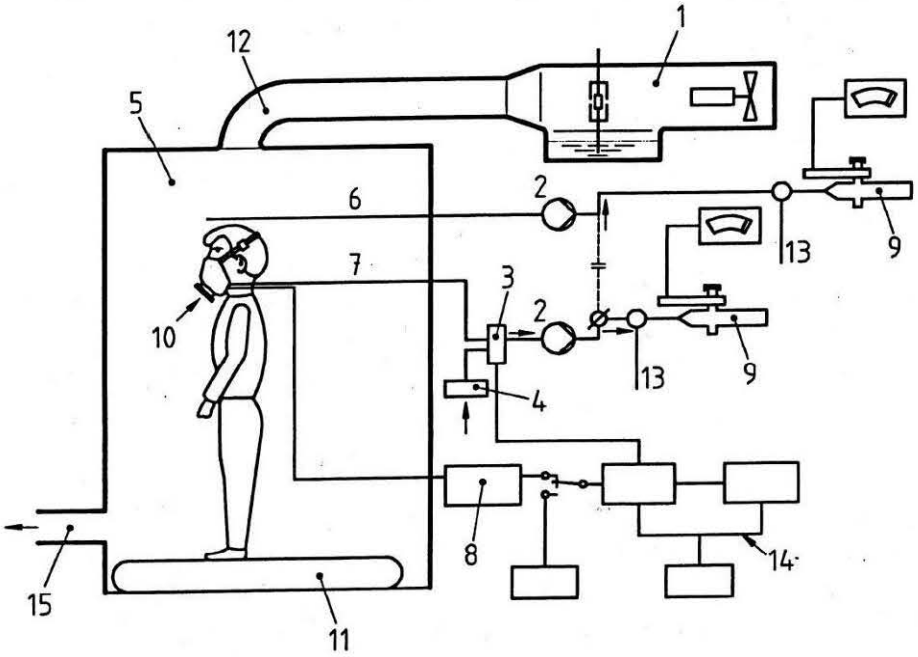

Key

1 Atomizer
2 Pump
3 Change-over valve
4 Filter
5 Enclosure
6 Enclosure sample
7 Mask sample
8 Manometer
9 Photometer
10 Particle filtering half mask
11 Treadmill
12 Ducting and baffle
13 Additional air
14 Pulsed sampling interface
15 Exhaust

Figure 3 — Typical apparatus used in the determination of inward leakage using sodium chloride

P

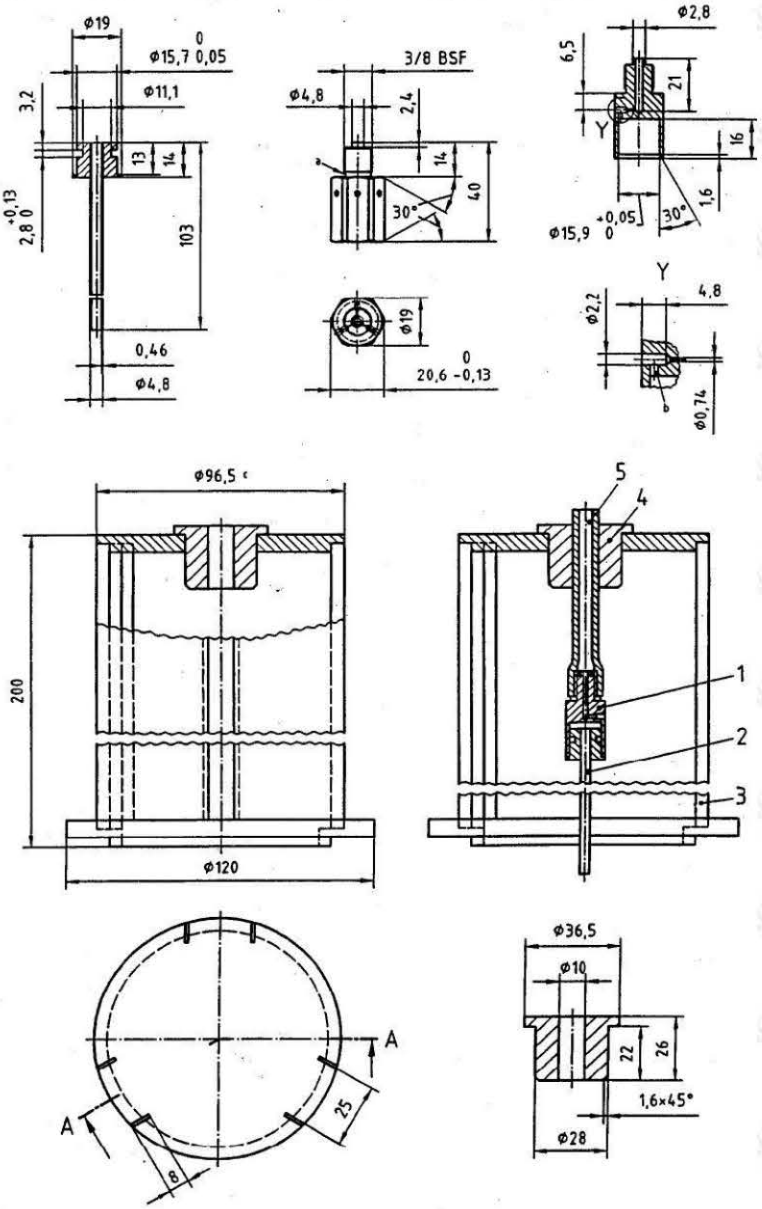

Key

1 Nozzle
2 Feed tube (salt solution)
3 Sleeve
4 Bush
5 Air tube (10,0 Outer Diameter)

Figure 4 — Typical assembly of atomizer

P

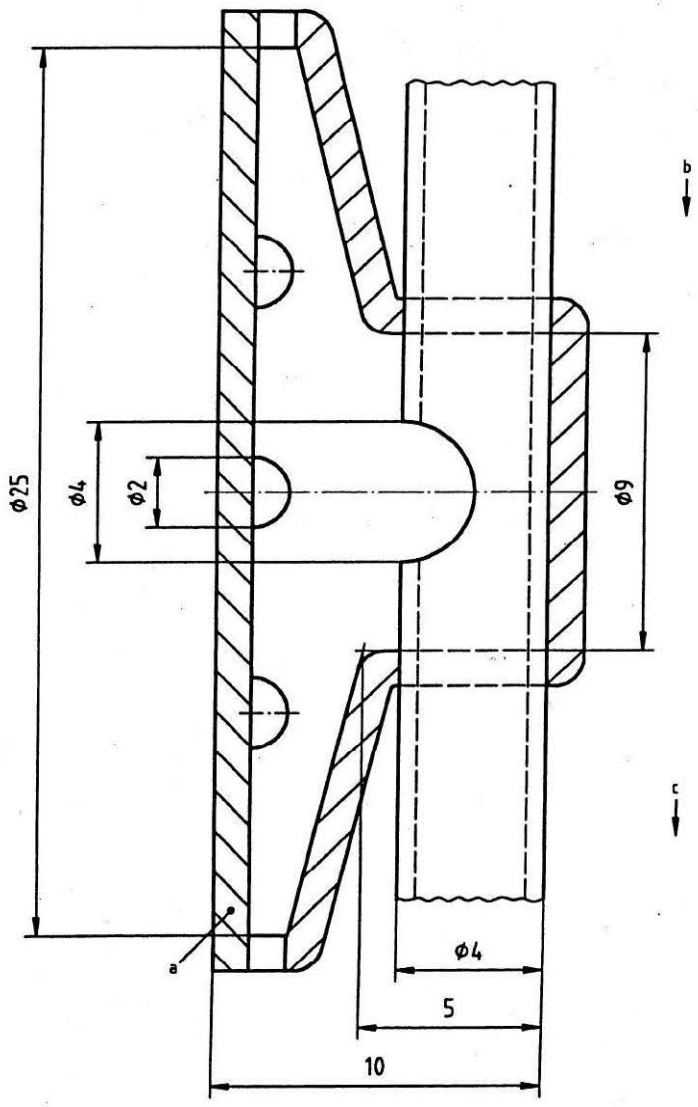

Key

a) Clear material
b) Drying air
c) Drying air plus sample

Figure 5 — Typical Sample probe

	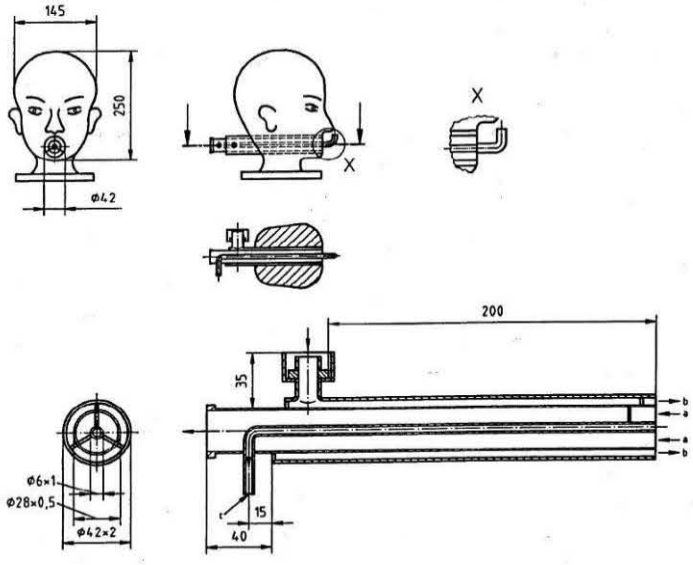 **Key** 1 to manometer 2 dummy head 3 to breathing machine, inhalation 4 exhaled air 5 pressure port 6 inhaled air 7 from breathing machine, exhalation **Figure 6 — Dummy head (Sheffield head) for carbon dioxide content test of the inhalation air (dead space) for a particle filtering half mask and insert for measuring the breathing resistance**	P

P

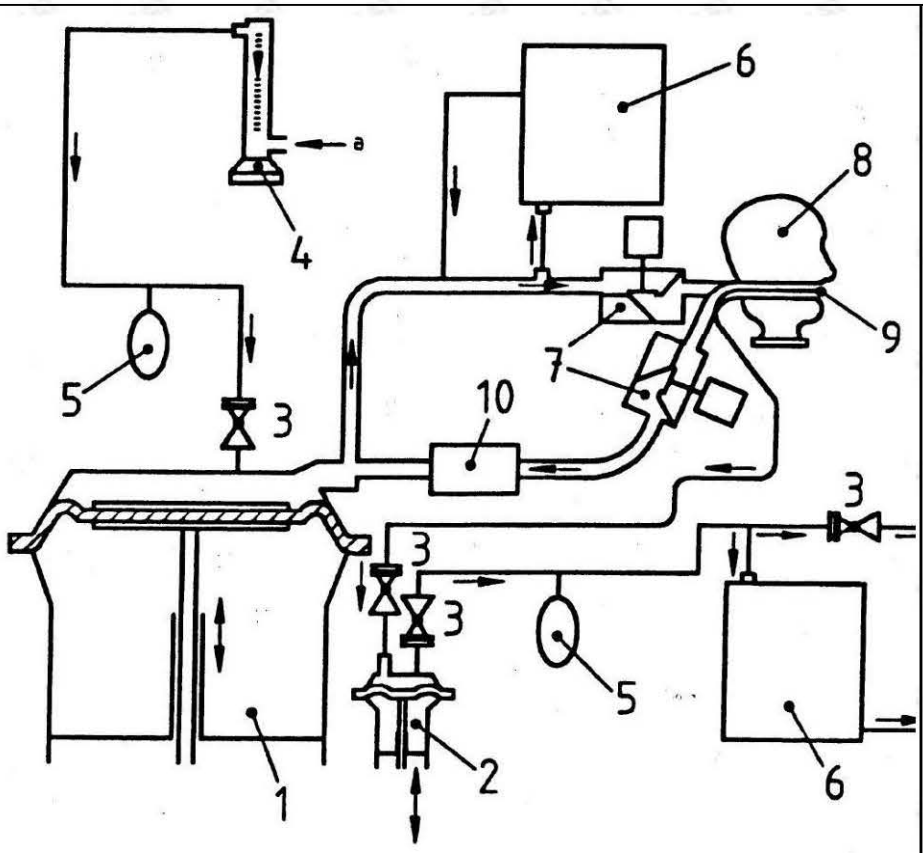

Key
a) CO_2

1 Breathing machine
2 Auxiliary lung
3 Non-return valve
4 Flowmeter
5 Compensator
6 Carbon dioxide analyser
7 Solenoid valve
8 Dummy head
9 Sampling tube for inhalation air (see Figure 6); tubing of the dummy head shall end flush with the opening of the mouth
10 Carbon dioxide absorber

Figure 7 — Scheme of typical test rig for carbon dioxide content of inhalation air

	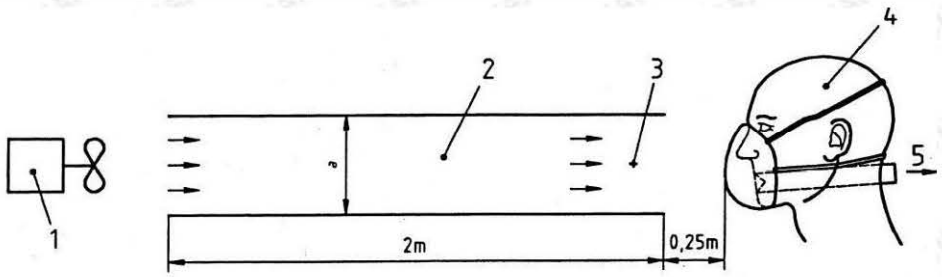 **Key** 1 Blower 2 Duct 3 Sensor for air flow 4 Dummy head 5 Towards the breathing machine Dimension "a": (0,3 to 0,5) m **Figure 8 — Scheme of test arrangement and air flow for carbon dioxide content test**	P
	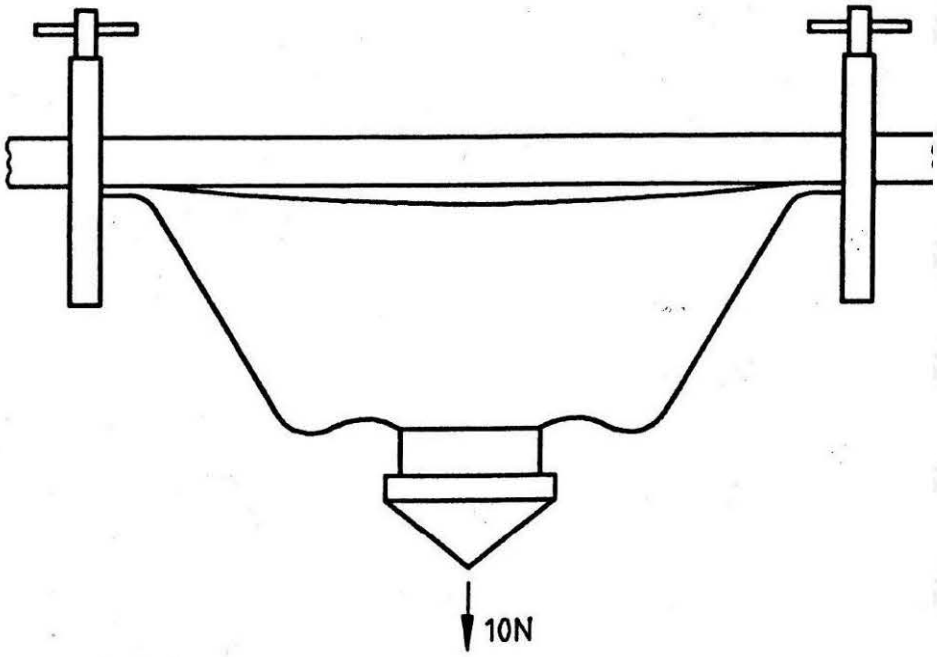 **Figure 9 — Typical arrangement of axial tensile force test on exhalation valve housing**	P

P

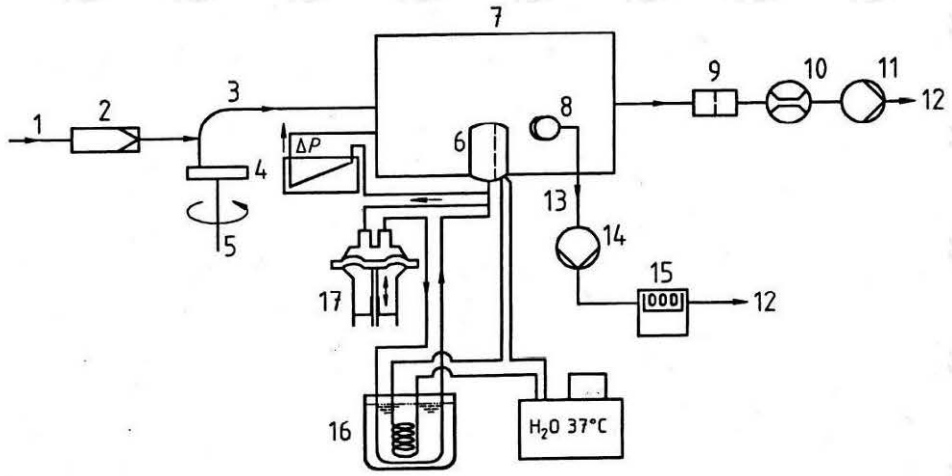

Key

1 Compressed air
2 Air filter
3 Injector
4 Dust
5 Dust distributor
6 Specimen
7 Dust test chamber
8 Probe
9 Filter
10 Flowmeter
11 Pump
12 Exhaust
13 Probe line
14 Pump
15 Counter
16 Humidity
17 Breathing machine

Figure 10 — Details of typical dolomite clogging test apparatus

P

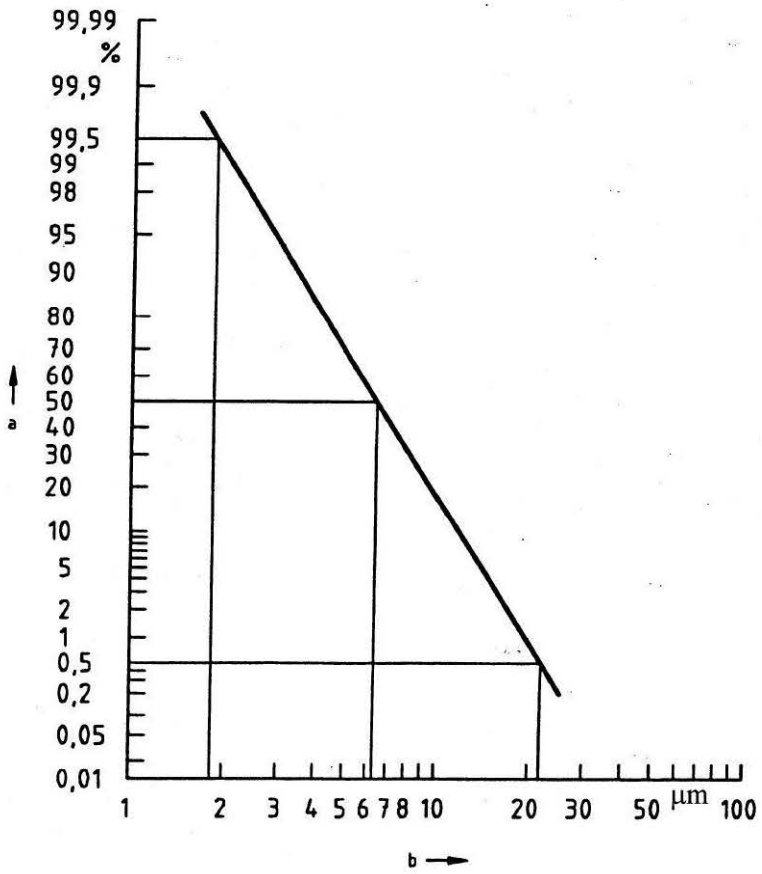

Size distribution (mass) dolomite DRB 4/15 test aerosol

a) Percentage above stated size

b) Particle diameter, mass basis (AC µm AC)

Figure 11 — Particle distribution of dolomite dust in the test chamber

Table 4 — Summary of requirements and test P

Title	Requirement clause	No. of samples [a]	Conditioning [b]	Test clause
Visual inspection	7.3, 7.4, 7.5, 7.6, 7.15, 7.18	All	-	8.2
Material	7.5	6	S.W. (3) T.C (3)	8.2
Cleaning and disinfection	7.6	5	A.R. (5)	Manufacturer's information
Practical performance	7.7	2	A.R (2)	8.4
Total inward leakage	7.9.1	10	A.R. (5) T.C. (5)	8.5
Penetration of filter material	7.9.2	9 (for each aerosol)	A.R. (3), S.W. (3), (M.S. + T.C. + C.D.) (3)	8.11
Compatibility with skin	7.10	10	A.R. (5), T.C. (5)	8.4, 8.5
Flammability	7.11	4	A.R. (2), T.C. (2)	8.6
Carbon dioxide content	7.12	3	A.R. (3)	8.7
Head harness	7.13	10	A.R. (5), T.C. (5)	8.4, 8.5
Field of vision	7.14	2	A.R. (2)	8.4
Exhalation valve	7.15	10	A.R. (5), T.C. (5)	8.5, 8.2
Exhalation valve flow	7.15	3	A.R. (1), T.C. (2)	8.3.4, 8.2
Exhalation valve pull	7.15	3	A.R. (1), M.S. (1), T.C. (1)	8.8, 8.2
Breathing resistance (valved devices)	7.16	12	A.R. (3), S.W. (3), T.C. (3), F.C. (3)	8.9
Breathing resistance (valveless devices)	7.16	9	A.R. (3), S.W. (3), T.C. (3)	8.9
Clogging test (optional for FFP1 + FFP2 + FFP3 single shift use devices only)	7.17	3	A.R. (1), T.C. (2)	8.10
Demountable parts	7.18	All	A.R.	8.2

[a] Most samples used for more than one test
[b] Abbreviations:
A.R. As received
M.S. Mechanical strength
S.W. Simulated wearing treatment
T.C. Temperature conditioned
F.C. Flow conditioned
C.D. Cleaning and Disinfecting, if applicable

Annex A Marking —

It is recommended to consider for marking the following components and sub-assemblies to be identifiable: P

Table A.1 — Marking P

Components/ sub-assemblies	Part-marking	Date of manufacture	Remarks
Exhalation valve disc	-	+	1
Head harness	+	+	1

+: The marking is necessary.

-: The marking is not necessary.

1: For parts which cannot reasonably be marked the relevant information shall be included in the information to be supplied by the manufacturer.

The components of a sub-assembly need not be marked when the sub-assembly is identifiable. Those components not offered as spare parts by the manufacturer need not be marked but the relevant information have to be given in the information to be supplied by the manufacturer.

7.92	Penetration of filter material		Result
Model	Sodium chloride test 95 l/min (%)	Paraffin oil test 95 l/min (%)	
PH001	3.10	3.05	P

7.16	Breathing resistance(mbar)			Result
Model	inhalation		exhalation	
	30 l/min	95 l/min	160 l/min	
PH001	0,38	2,05	2,18	P

This report shall not be reproduced except in full, without the written approval of Shenzhen UHAT Technology Co., Ltd.
Tel: 86-755-32986968 Fax: 86-755-32986988 http://www.uhatt.com E-mail:uhat315@126.com

Appendix 2: Photo-documentation

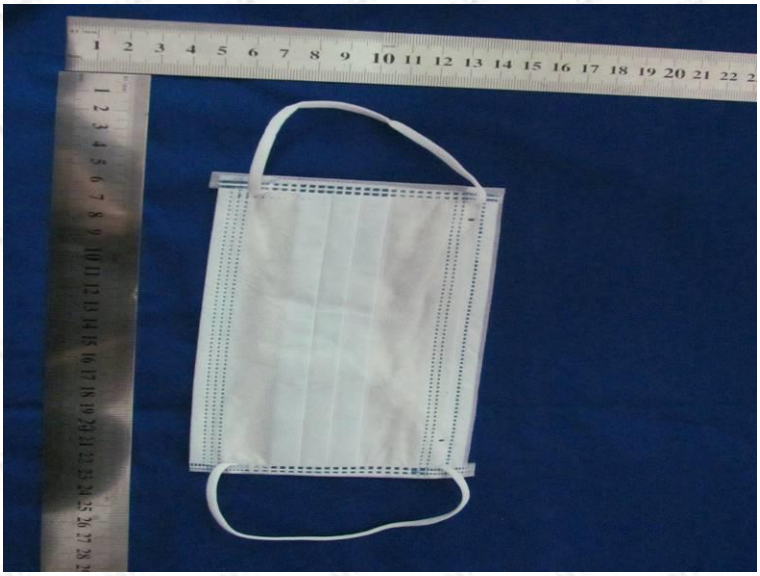

*****End of Test Report*****

This report shall not be reproduced except in full, without the written approval of Shenzhen UHAT Technology Co., Ltd.
Tel: 86-755-32986968 Fax: 86-755-32986988 http://www.uhatt.com E-mail:uhat315@126.com